IP20 IP44 | 3 x 1,5 | 5 x 2,5 | DALI-2

Cosy Tilt

With the Cosy Tilt downlights, you can create a lighting solution that does not generate glare. The luminaire's inner ring eliminates glare and reflections effectively. Typical applications include museums, restaurants, galleries, hotels, residential properties and any other spaces where excellent colour rendition properties are required. All models are dimmable.

- Die-cast aluminium housing and acrylic diffuser
- Reflector 36D, high gloss aluminium.
- White, RAL 9010.
- Protection class II.
- Recessed mounting on a ceiling, cut out Ø 81–83 mm.
- Linkable, max 3 x 1,5 mm^2, Dali-2-models 5 x 2,5 mm^2.
- Installation height 2–6 m
- Colour temperatures 3000 K and 4000, CRI > 90 / Ra > 90.
- MacAdam 3 SDCM.
- IP20/IP44.
- Integrated LED 7 W: 3000 K 530 lm, 4000 K 580 lm.
- Dimming: rising- and trailing-edge control, Dali-2 with push-button control (230 V) and Casambi.
- Ambient temperature range 0 ... 25 °C.
- Rated lifetime L70 90 000 h (Ta25°C).
- Rated lifetime L80 60 000 h (Ta25°C).

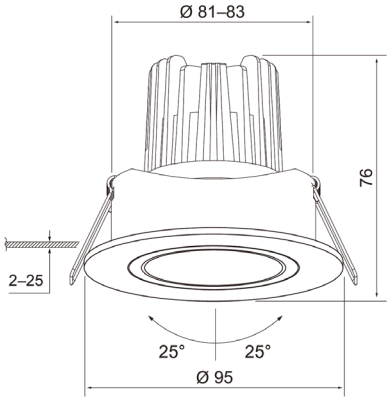

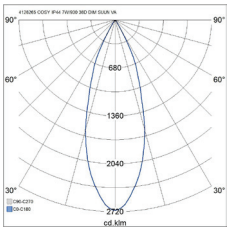

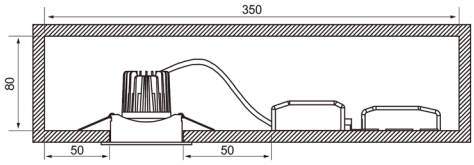

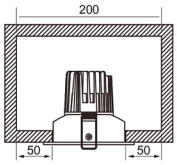

By order • In stock

Cosy Tilt Dim

NO.	CODE		W	LM
• 4126265	A1COEC	IP44 7W/930 36D DIM ACC WH	7	530
• 4126266	A1COED	IP44 7W/940 36D DIM ACC WH	7	580

Cosy Tilt Dali

NO.	CODE		W	LM
	A1COEC-DALI	IP44 7W/930 36D DA2 ACC WH	7	530
	A1COED-DALI	IP44 7W/940 36D DA2 ACC WH	7	580

Cosy Tilt Casambi

NO.	CODE		W	LM
	A1COEC-CA	IP44 7W/930 36D CA ACC WH	7	530
	A1COED-CA	IP44 7W/940 36D CA ACC WH	7	580